SAMSUNG CONFIDENTIAL
THIS DOCUMENT CONTAINS CONFIDENTIAL
PROPRIETARY INFORMATION THAT IS
SAMSUNG ELECTRONICS CO'S PROPERTY.
DO NOT DISCLOSE TO OR DUPLICATE FOR OTHERS
EXCEPT AS AUTHORIZED BY SAMSUNG.

A32 5G Global REV03A

SM-A326B/BR/M326B
Common

2020.12.07(SMD)

sheet01 : GSM / WCDMA / LTE / 5G sub6 RF
sheet02 : TRANCEIVER, DRX
sheet03 : SENSORS,CONNECTIVITY
sheet04 : AP(MT6853)
sheet05 : PMIC(Main,IF), KEY, MOTOR, UFS
sheet06 : AUDIO, SD/SIM, SHIELD CAN, IF CON
sheet07 : CAMERA, DISPLAY

	A32_5G_RF_feature		
NR	n1/n3/n5/n7/n8/n20/n28 n38/n40/n41/n78/n79		
FDD	1/2/3/4/5/7/8/12/17/20/26/28/66		
TDD	38/ 40/ 41	4X4 MIMO	1/3/7/41/n78/n79
3G	1/2/4/5/8	SRS	n41/n78/n79
2G	850/ 900/ 1800/ 1900	Mid-Mid ENDC	n1/n3

Engineer:			
Drawn by:			
R&D CHK:	TITLE:		Size:
DOC CTRL CHK:	SM-A515FM		
MFG ENGR CHK:			
Changed by: user93	Date Changed:	Time Changed:	QA CHK:
REV	Drawing Number:		Page: 0

SAMSUNG CONFIDENTIAL
THIS DOCUMENT CONTAINS CONFIDENTIAL
AND PROPRIETARY INFORMATION OF
SAMSUNG ELECTRONICS CO'S PROPERTY.
DO NOT DISCLOSE TO OR DUPLICATE FOR OTHERS
EXCEPT AS AUTHORIZED BY SAMSUNG.

RF PART 1

MAIN ANT1
LB/MB, n7/n41 DRX MIMO

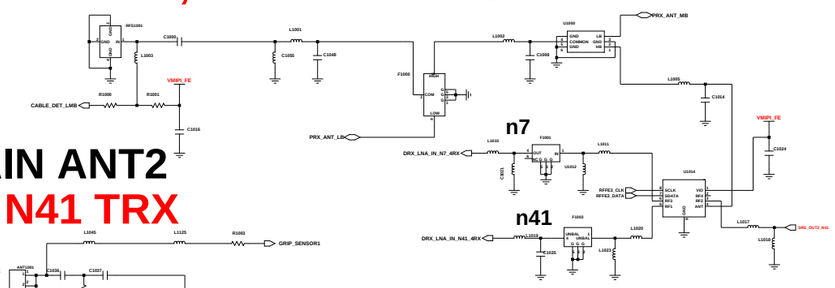

MAIN ANT2
HB, N41 TRX

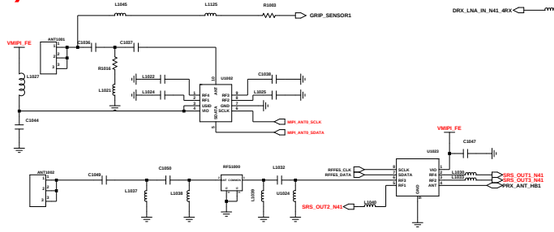

U1021

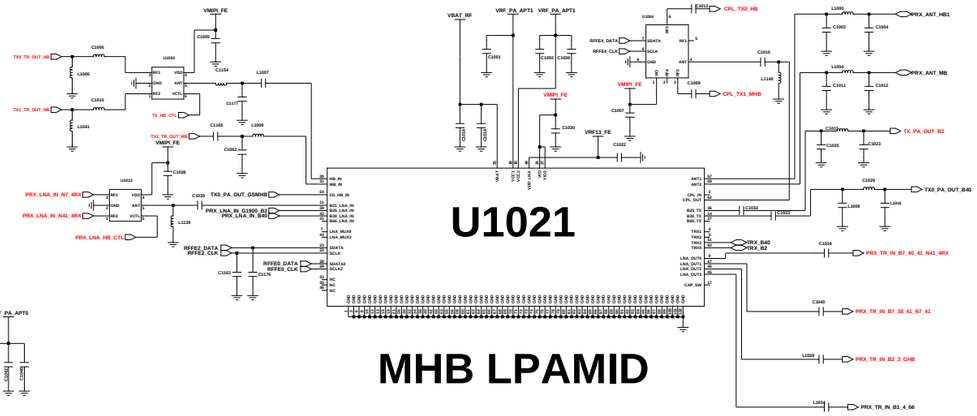

MHB LPAMID

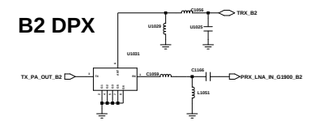

MB PA(N1/3)

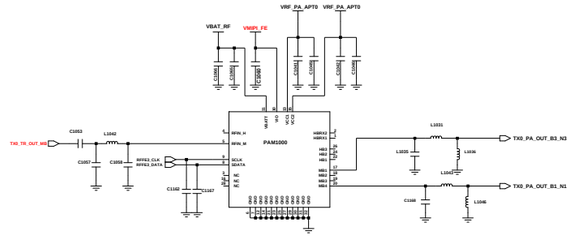

DRX FEM

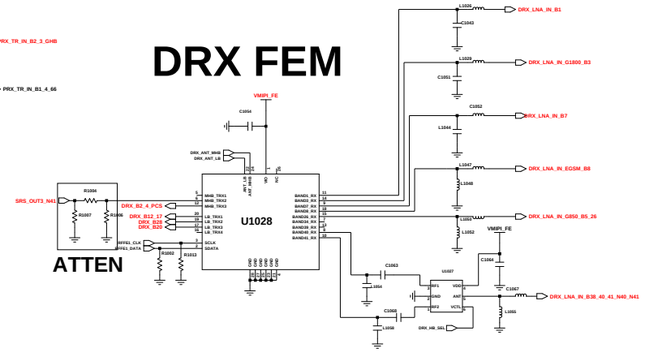

SUB ANT1
DRX L/M/H,n41/n79 PRX MIMO

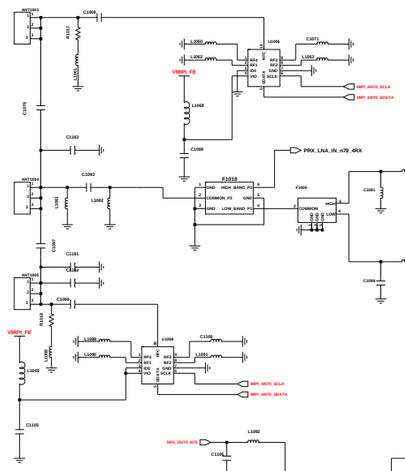

LB LPAMID

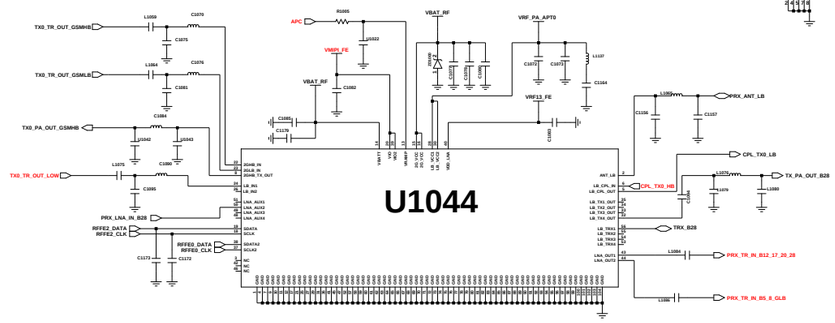

N79 PRX MIMO
ATTEN

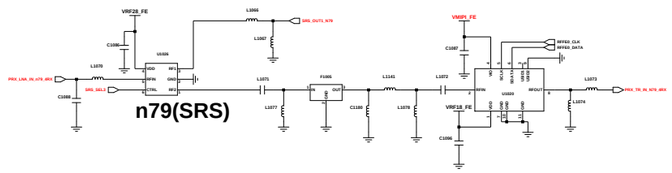

DRX LNA BANK

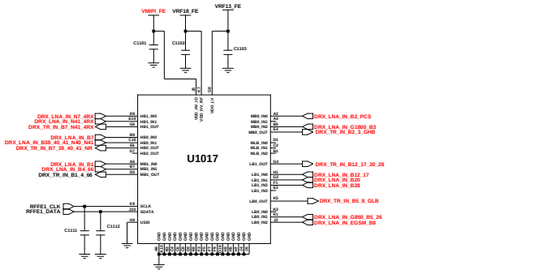

SUB ANT2
n7/n41 PRX MIMO, n78 PRX MIMO
b1/b3 DRX MIMO

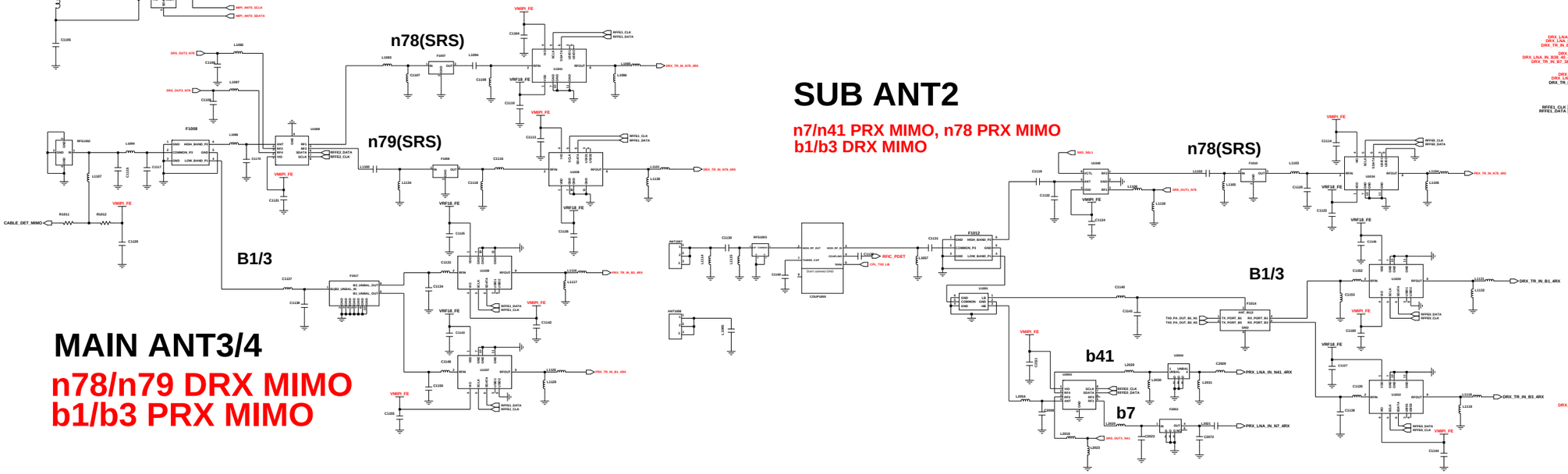

DRX filter

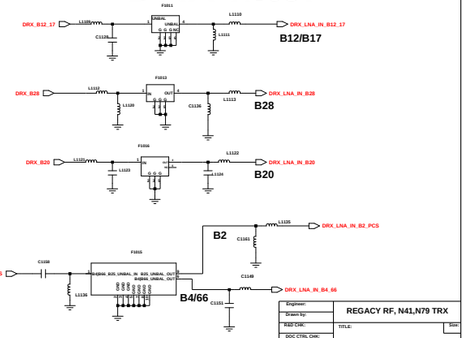

MAIN ANT3/4
n78/n79 DRX MIMO
b1/b3 PRX MIMO

Engineer:	REGACY RF, N41,N79 TRX
Drawn by:	
R&D CHK:	TITLE:
DOC CTRL CHK:	
RFIC ENGR CHK:	
QA CHK:	REV: Drawing Number: Page

SAMSUNG CONFIDENTIAL
THIS DOCUMENT CONTAINS CONFIDENTIAL PROPRIETARY INFORMATION THAT IS SAMSUNG ELECTRONICS CO'S PROPERTY. DO NOT DISCLOSE TO OR DUPLICATE FOR OTHERS EXCEPT AS AUTHORIZED BY SAMSUNG.

RF PART 2

SUB ANT4
N78 TRX

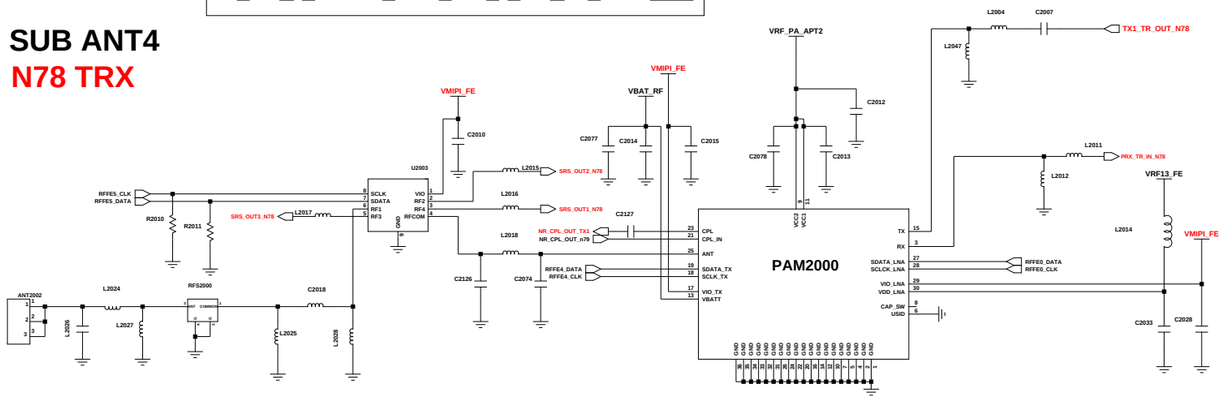

N78 LPAMID

SUB ANT5
n78/n79 DRX

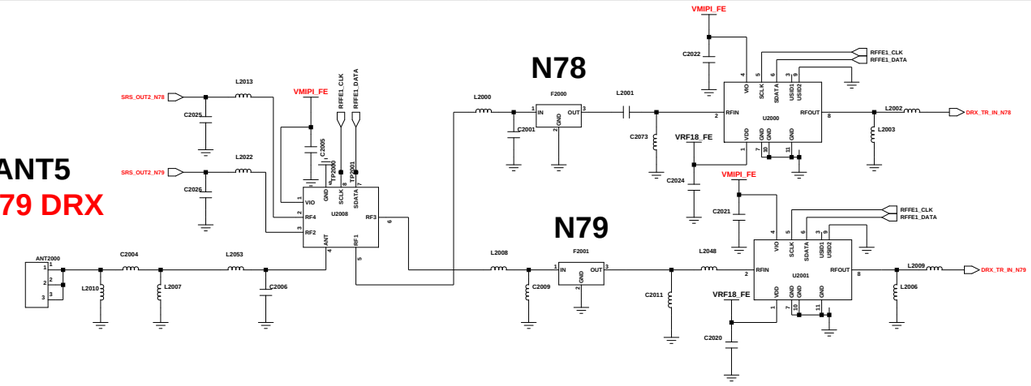

SUB ANT3
N79 TRX

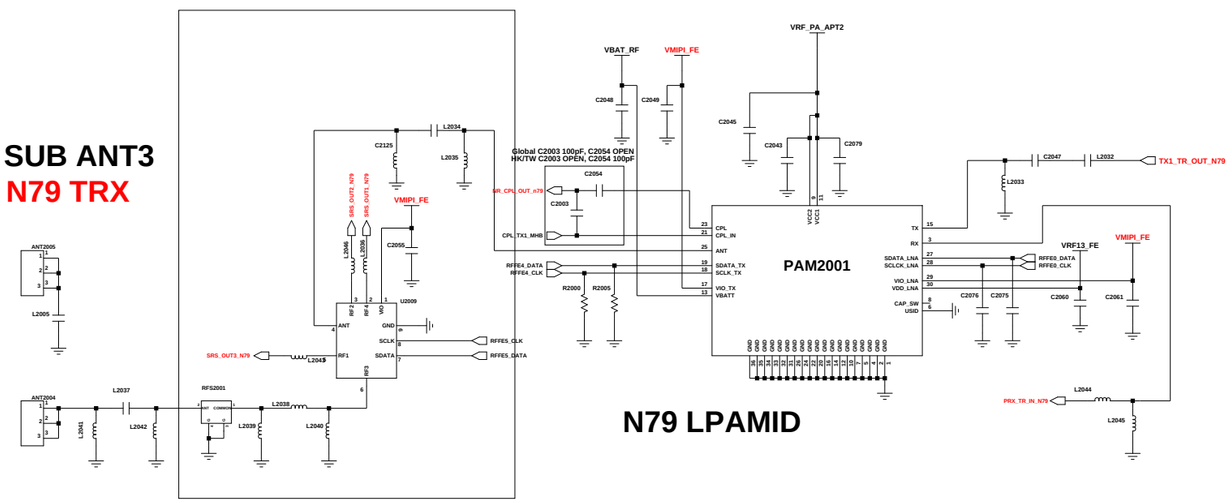

EUR : OPEN
HK/TW : USE COMPONENT

N79 LPAMID

APT MODULATOR

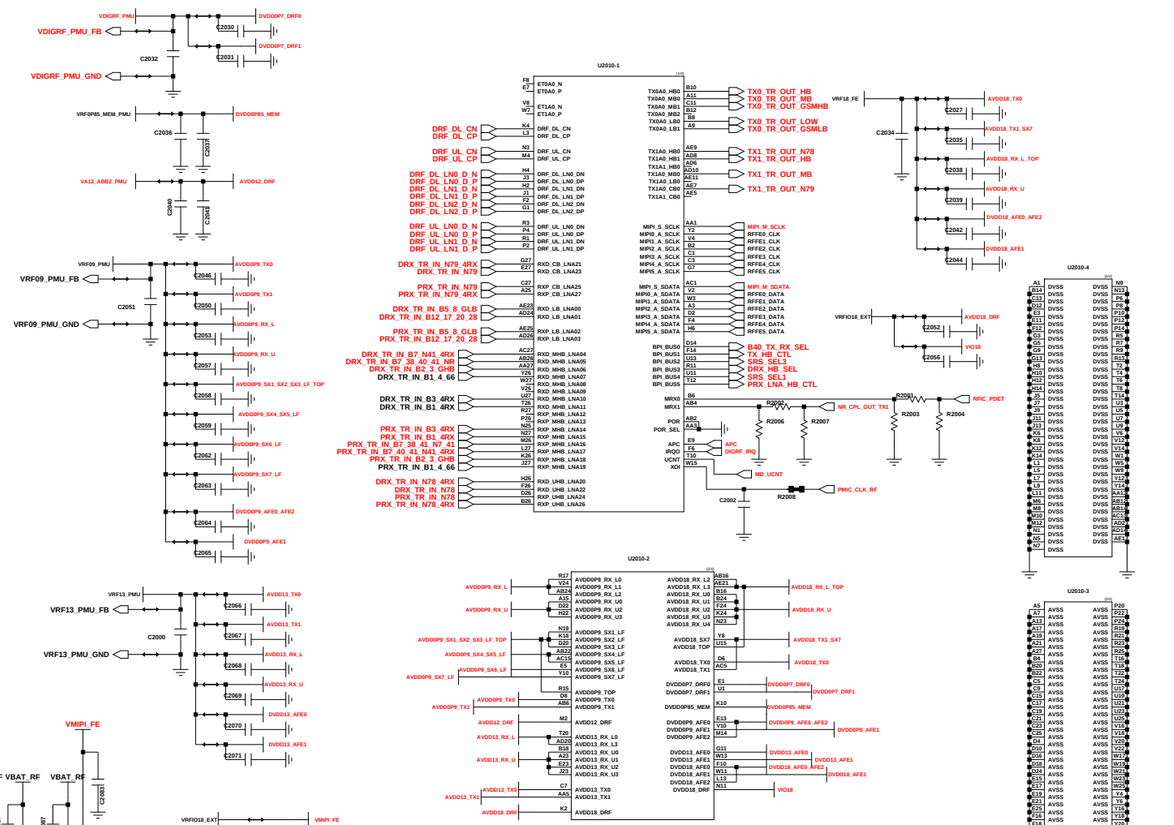

TRANCEIVER

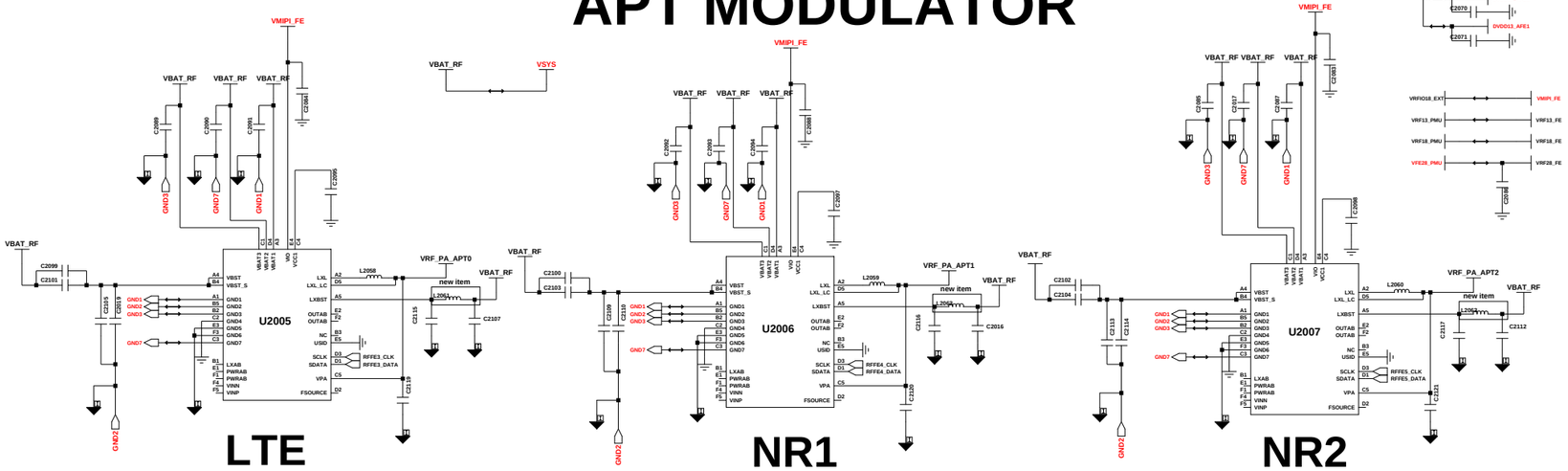

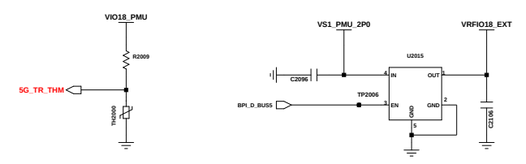

NR THM

Engineer	DRX, TRANCEIVER	
Drawn by:		
R&D CHK:	TITLE:	Size:
DOC CTRL CHK:		
MFG ENGR CHK:		
QA CHK:	Drawing Number	2/7

Changed by: | Date Changed: | Time Changed:

SAMSUNG CONFIDENTIAL
THIS DOCUMENT CONTAINS CONFIDENTIAL
PROPRIETARY INFORMATION THAT IS
SAMSUNG ELECTRONICS CO'S PROPERTY.
DO NOT DISCLOSE TO OR DUPLICATE FOR OTHERS
EXCEPT AS AUTHORIZED BY SAMSUNG.

BT/WIFI GPS

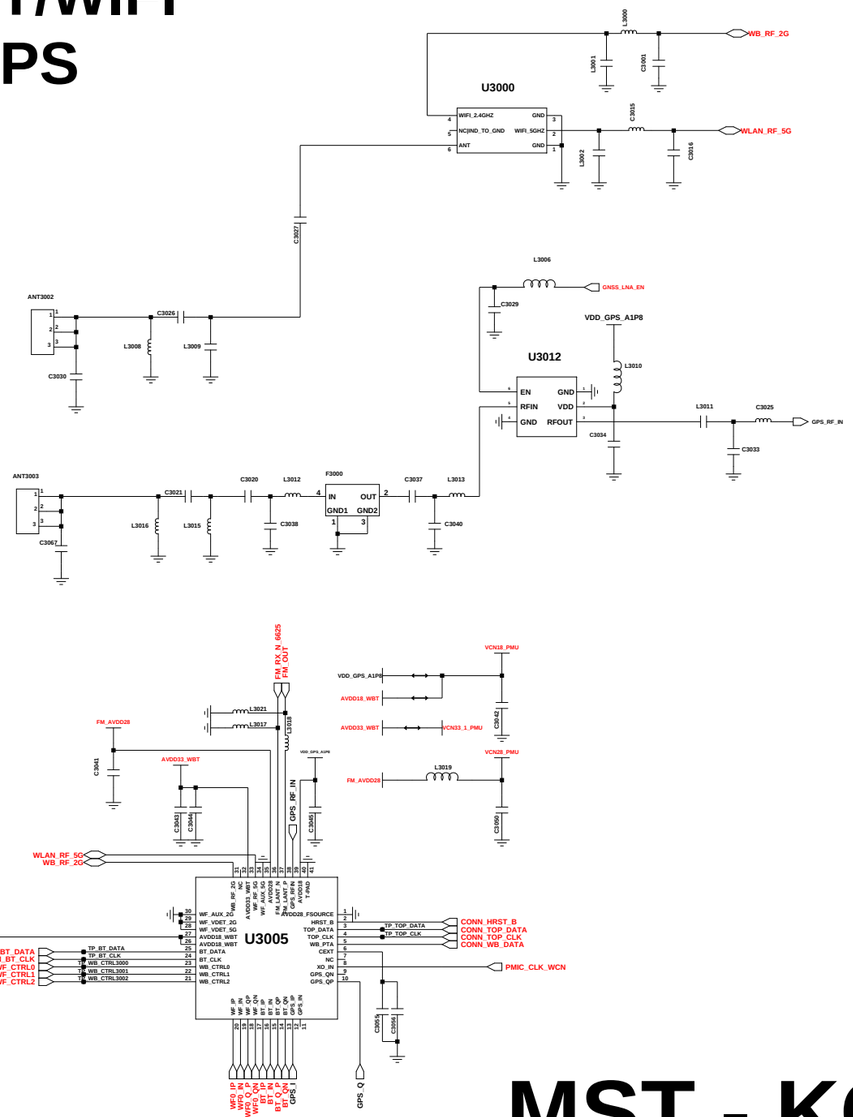

NFC

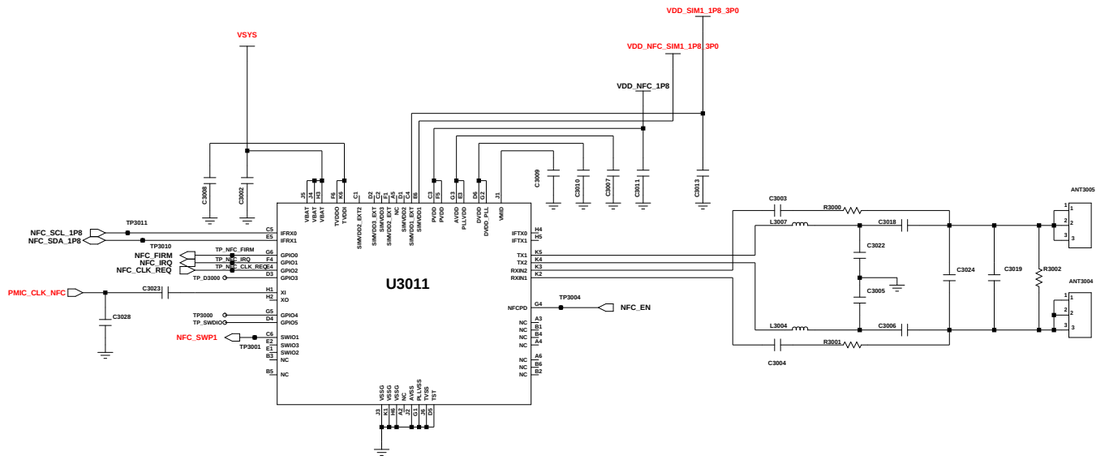

SENSORS

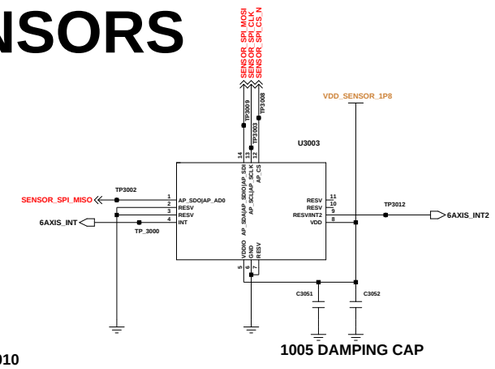

6 AXIS(ACC+GRYO)

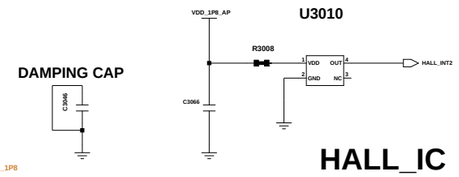

HALL_IC

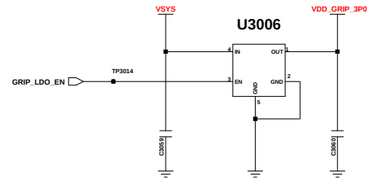

MST - KOR only

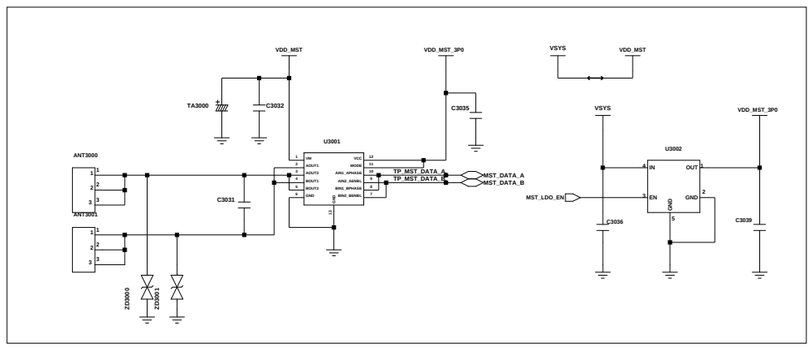

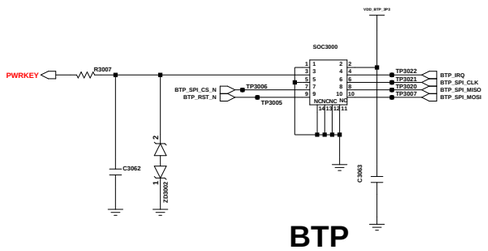

BTP

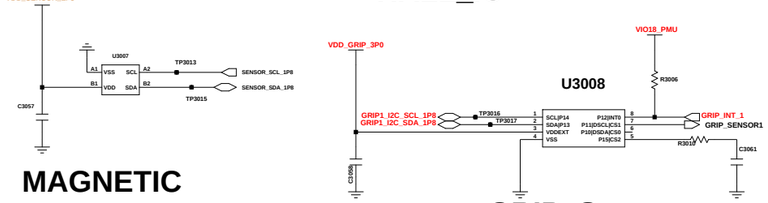

MAGNETIC

GRIP_Sensor

Engineer:	SENSOR, WIFI/BT/GPS/NFC
Drawn by:	
R&D CHK:	TITLE:
DOC CTRL CHK:	Size:
MFG ENGR CHK:	

Changed by:	Date Changed:	Time Changed:	QA CHK:	REV:	Drawing Number:	Page:
user93						97

SAMSUNG CONFIDENTIAL
THIS DOCUMENT CONTAINS CONFIDENTIAL
AND PROPRIETARY INFORMATION OF
SAMSUNG ELECTRONICS CO'S PROPERTY.
DO NOT DISCLOSE TO OR DUPLICATE FOR OTHERS
EXCEPT AS AUTHORIZED BY SAMSUNG.

MT6853

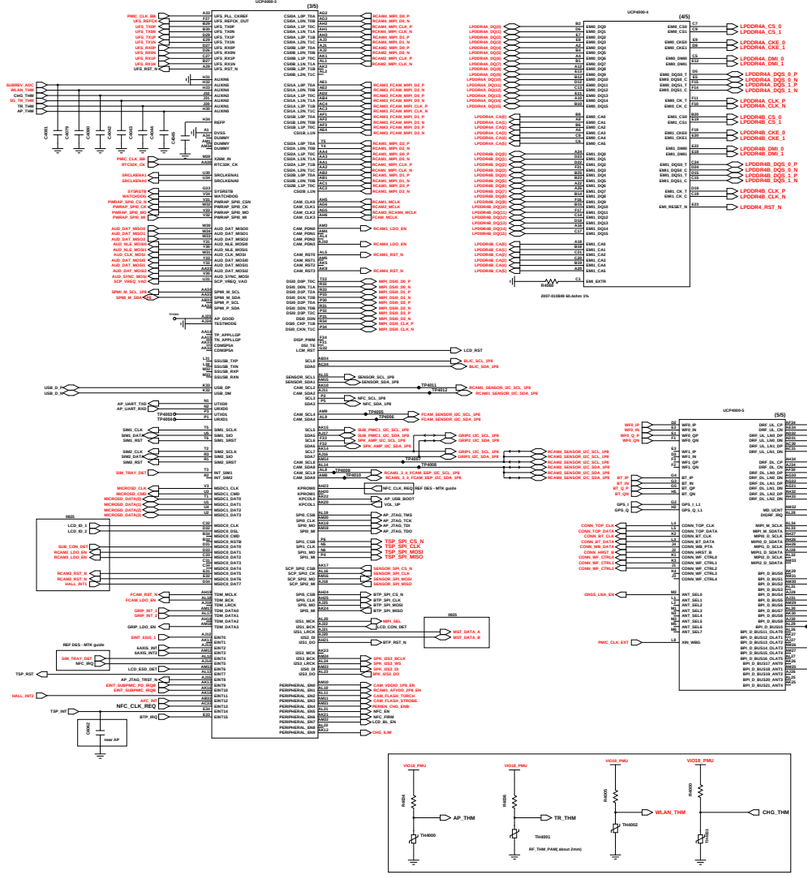

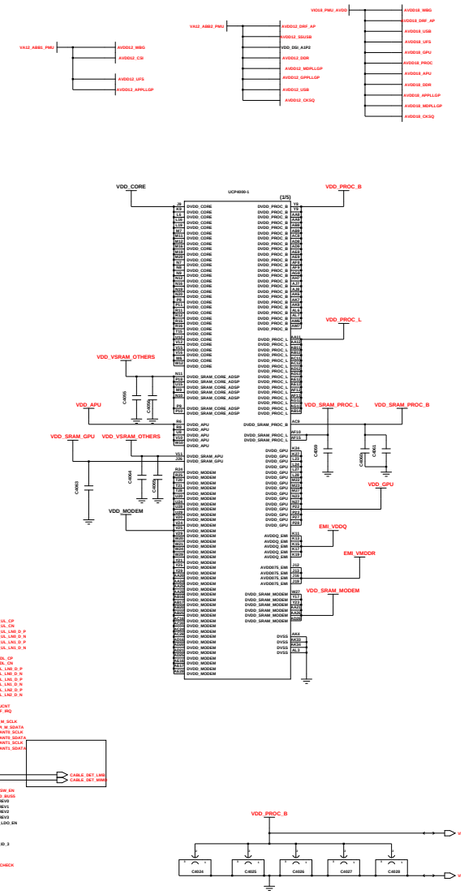

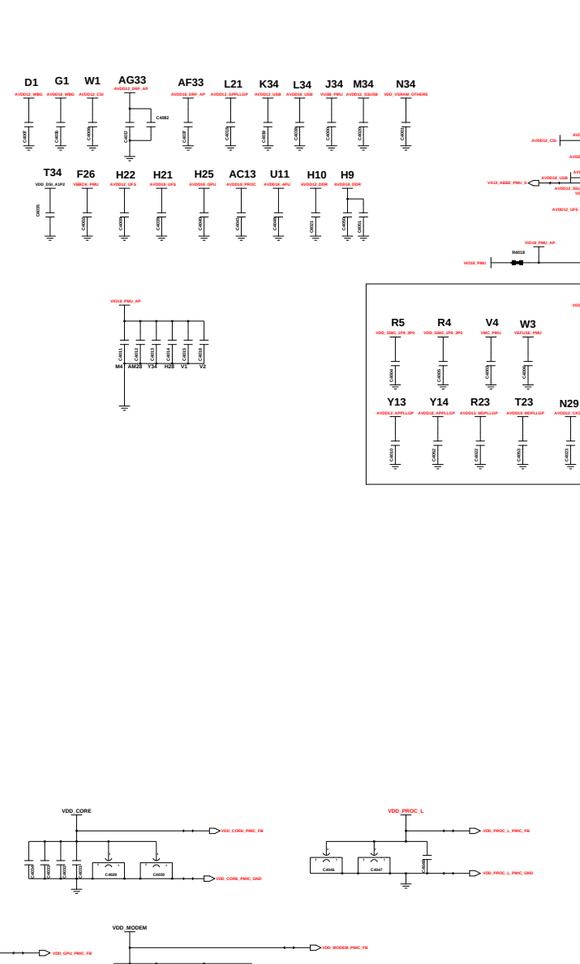

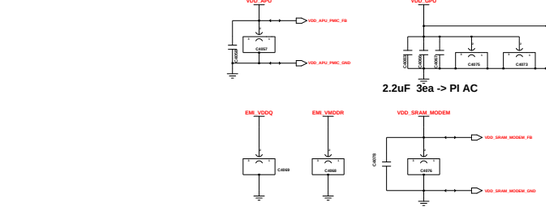

2.2uF 3ea -> PI AC

4.7uF -> PI AC

H/W Revision Setting

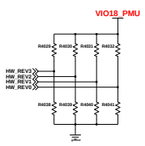

REV	HW_VER3	HW_VER2	HW_VER1	HW_VER0
1st BR	0	0	0	0
2nd BR	0	0	0	1
3rd BR	0	0	1	0
REV00	0	0	1	1
REV01	0	1	0	0
REV02	0	1	0	1
REV03	0	1	1	0
REV03A	0	1	1	1

PCB JTAG

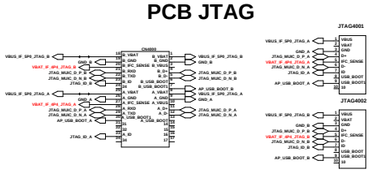

POWER OFF LEAKAG

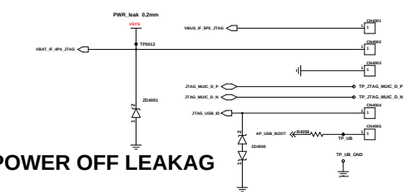

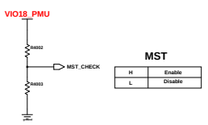

MST	
H	Enable
L	Disable

N79
SHORT : enable, OPEN : disable

MST
SHORT : enable, OPEN : disable

Model

B

BR

N

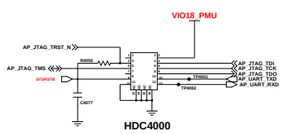

DRAM	UFS
4G	64G
6G	128G
8G	128G

AP JTAG

Default meaning is AP internal setting, so no need external PU/PD

PWRAP_SPI0_CSN	AUD_DAT_MOSI0	AP JTAG	MODEM JTAG
H (Default)	L (Default)	N/A	N/A
H	H (by external PU)	SPI0 + EINT8	N/A
L (by external PD)	L	SPI0 + EINT8	TDM_
L (by external PD)	H (by external PU)	MSDC1_	N/A

AUD_SYNC_MOSI	AUD_NLE_MOSI0	Storage Booting
L (Default)	L (Default)	only UFS boot
L	H (by external PU)	only eMMC boot
H (by external PU)	L	Reserved MTK Debug
H (by external PU)	H (by external PU)	Reserved MTK Debug

AUD_NLE_MOSI1	USB_JTAG
L (Default)	USB 2.0
H (by external PU)	DP/DM output JTAG

AUD_DAT_MOSI1	AUD_DAT_MOSI2	DDR
L (Default)	L (Default)	LP4x-MCP
L	H (by external PU)	Reserved MTK Debug
H (by external PU)	L	Reserved MTK Debug
H (by external PU)	H (by external PU)	Reserved MTK Debug

AUD_DAT_MISO1	VEMC Voltage
L (Default)	VEMC=3.0V for UFS2.1 device
H (by external PU)	VEMC=2.5V for UFS3.0 device

Engineer:	AP
Drawn by:	
R&D CHK:	TITLE:
DDC CTRL CHK:	Size:
MFG ENGR CHK:	
QA CHK:	REV: Drawing Number: Page:

Changed by: | Date Changed: | Time Changed:

SAMSUNG CONFIDENTIAL
THIS DOCUMENT CONTAINS CONFIDENTIAL PROPRIETARY INFORMATION THAT IS SAMSUNG ELECTRONICS CO'S PROPERTY
DO NOT DISCLOSE TO OR DUPLICATE FOR OTHERS EXCEPT AS AUTHORIZED BY SAMSUNG

MAIN_PMIC

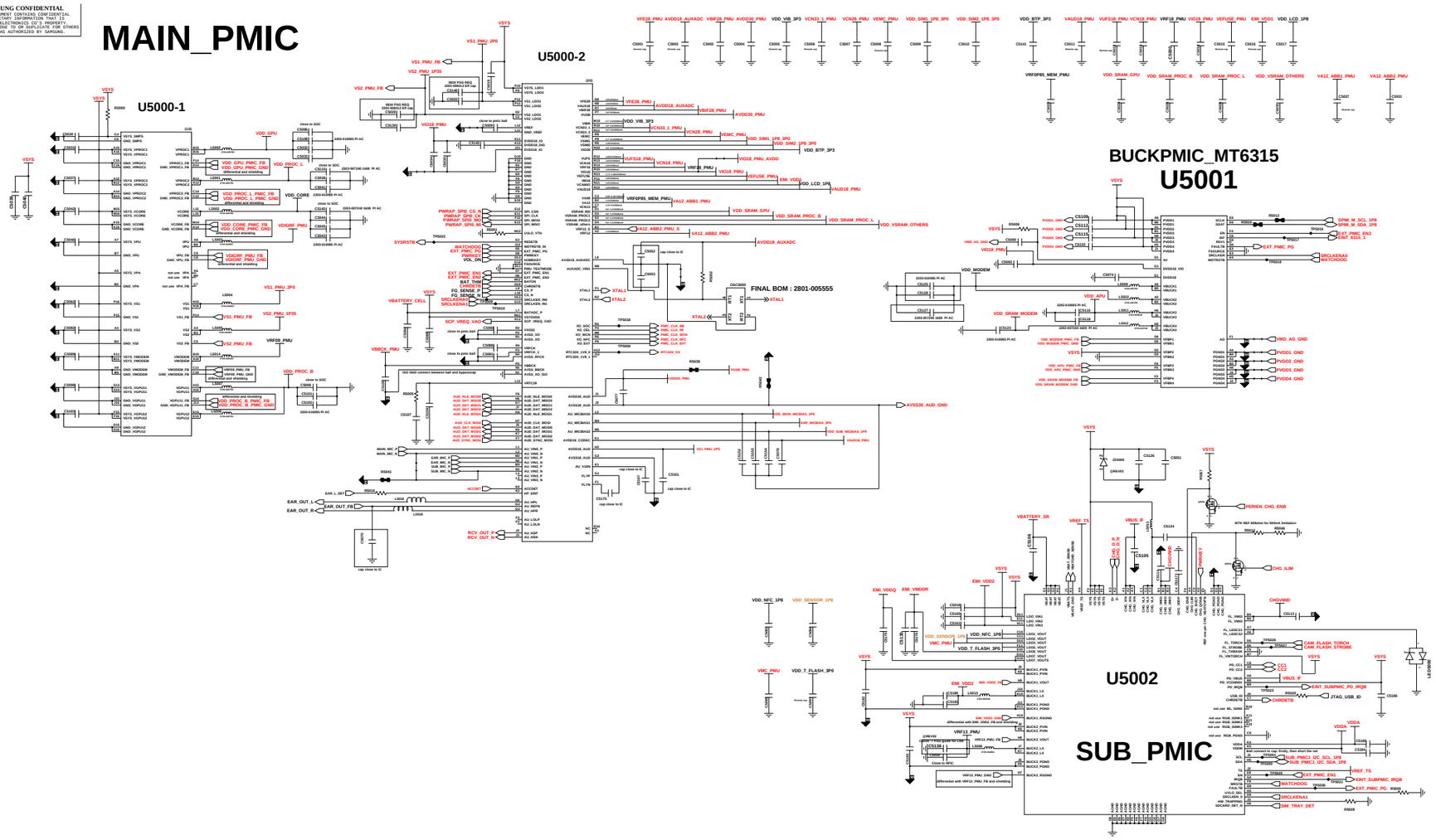

UFS MEMORY

DV : 4 + 64 SEC V4
PV : 4 + 64 SEC V6
PR : 8 + 128 SEC(1108-000675)

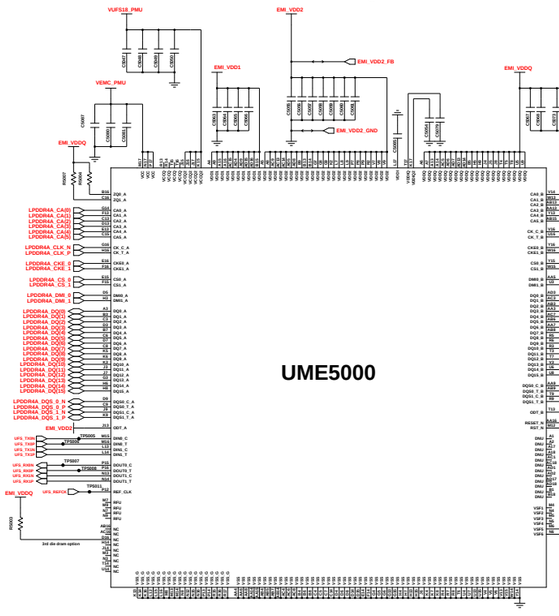

MOTOR

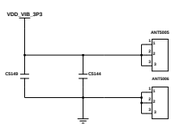

VOLUME KEY

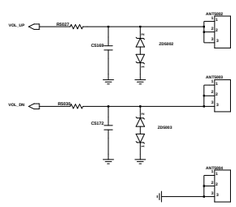

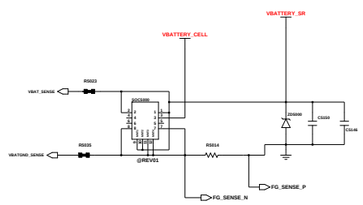

BATTERY CON

OVP CIRCUIT (FOR FAST CHARGING)

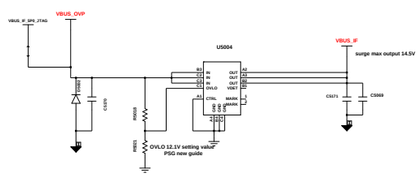

Engineer:	PMIC/IF PMIC/eMMC
Drawn by:	
R&D CHK:	TITLE:
DOC CTRL CHK:	
MFG ENGR CHK:	
QA CHK:	REV: Drawing Number: Page 1/7

Changed by: | Date Changed: | Time Changed:

SAMSUNG CONFIDENTIAL
THIS DOCUMENT CONTAINS CONFIDENTIAL
PROPRIETARY INFORMATION THAT IS
SAMSUNG ELECTRONICS CO'S PROPERTY.
DO NOT DISCLOSE TO OR DUPLICATE FOR OTHERS
EXCEPT AS AUTHORIZED BY SAMSUNG.

SIM / T-FLASH (3in2)

Bring Up : 3in3 A307 SIM socket

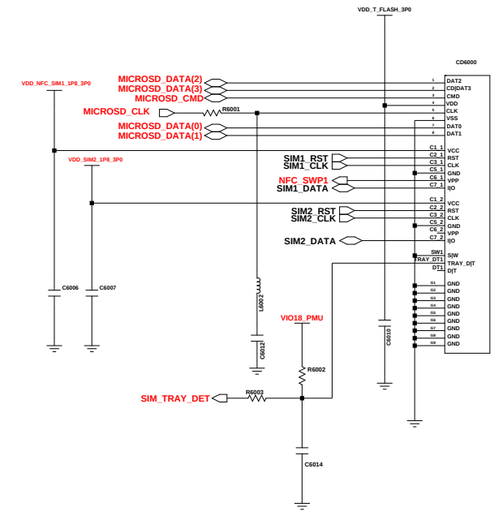

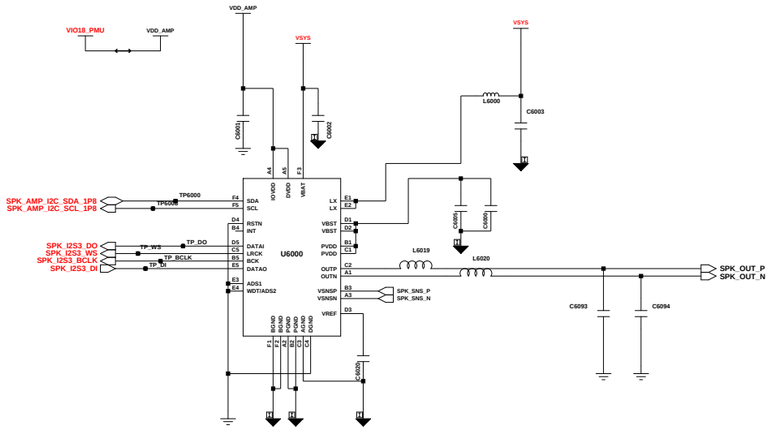

SPK AMP

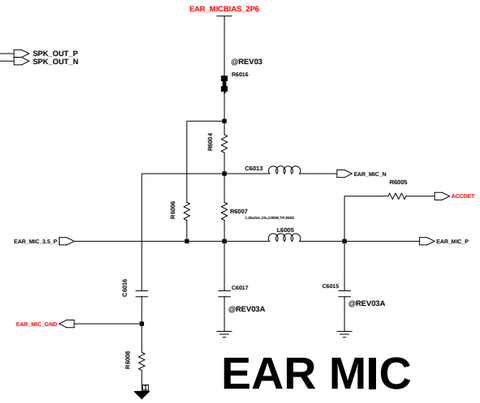

EAR MIC

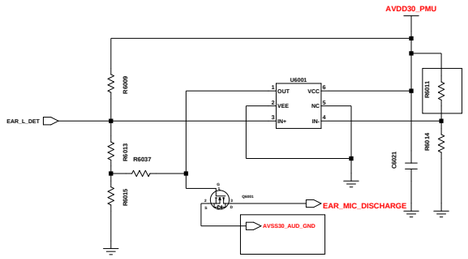

ear mic antipop

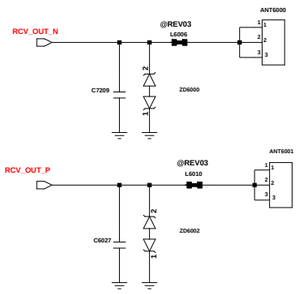

RCV CONTACT

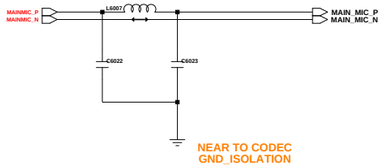

MAIN MIC

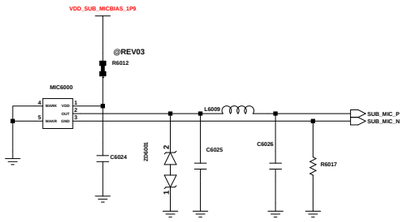

SUB MIC

MAIN FPCB

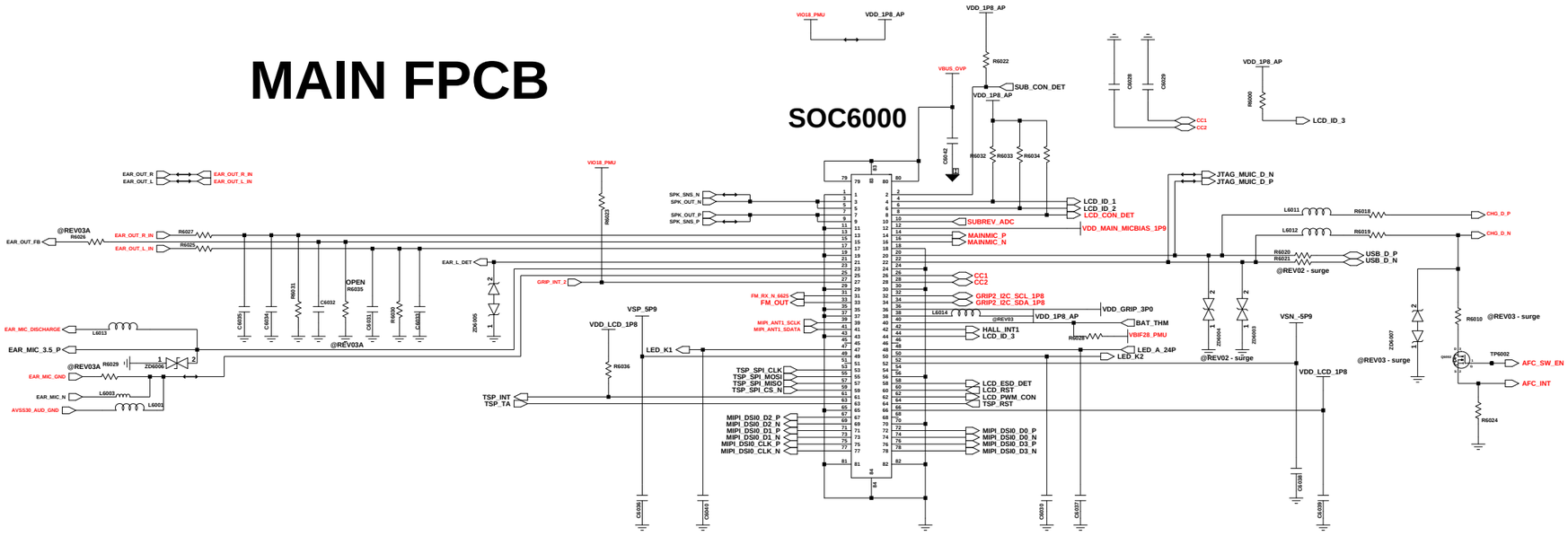

SHIELD CAN

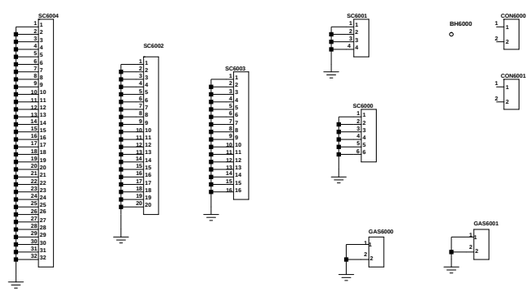

SMR - LCD SUS

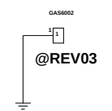

CAM DECO SMR

Engineer:			
Drawn by:	AUDIO, SIM/SD, SHIELD CAN		
R&D CHK:	TITLE:		Size:
DOC CTRL CHK:			
MFG ENGR CHK:			
Changed by:	Date Changed:	Time Changed:	QA CHK:
REV	Drawing Number:		Page:6/7

SAMSUNG CONFIDENTIAL
THIS DOCUMENT CONTAINS CONFIDENTIAL PROPRIETARY INFORMATION THAT IS SAMSUNG ELECTRONICS CO'S PROPERTY. DO NOT DISCLOSE TO OR DUPLICATE FOR OTHERS EXCEPT AS AUTHORIZED BY SAMSUNG.

CAMERA_PART

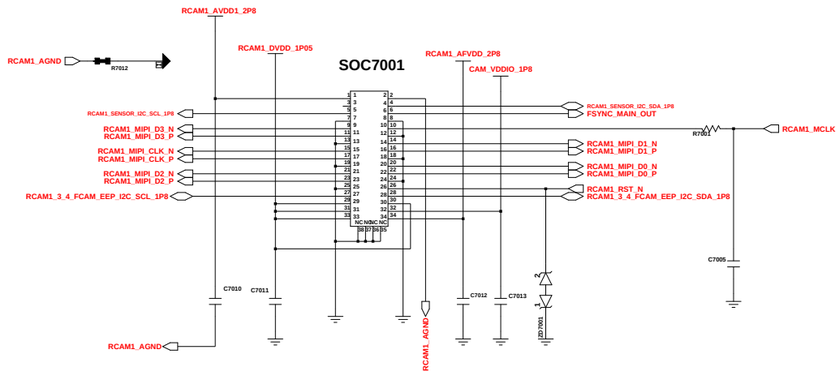

RCAM1_48M(34PIN)

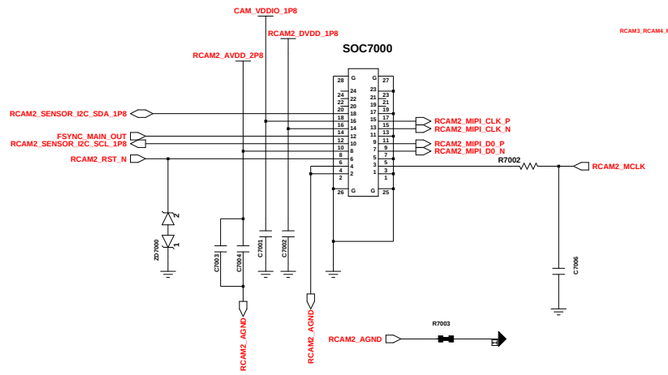

RCAM2_2M BOKEH CAMERA(24PIN)

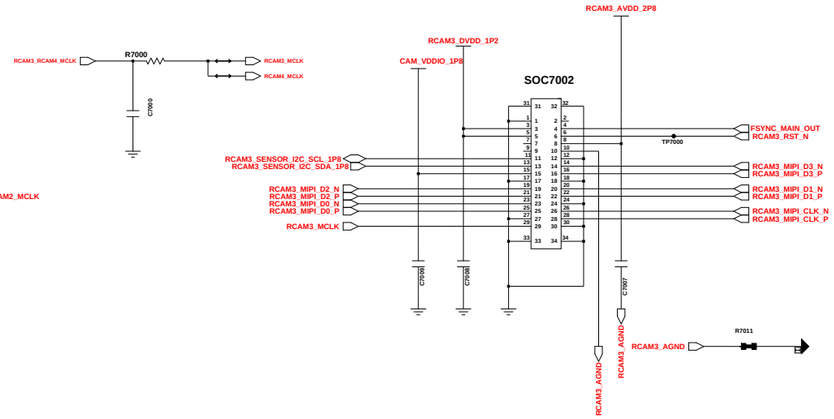

RCAM3_ULTRA WIDE_8M(30pin)

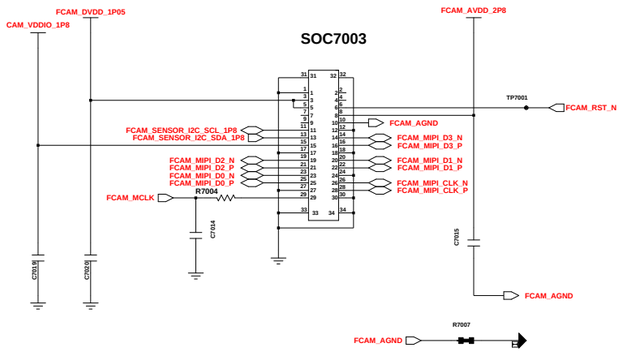

FCAM_13M(30PIN)
A21S 13M CAM use

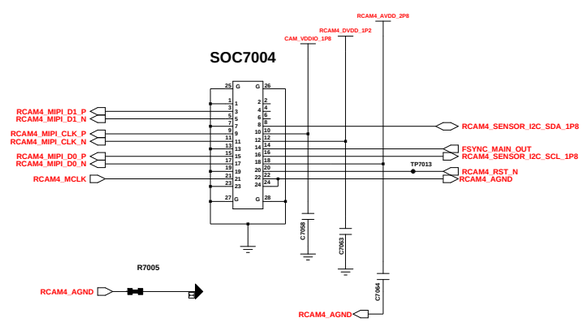

RCAM4_5M MACRO CAMERA(24PIN)

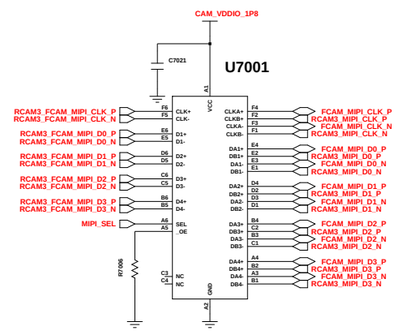

MIPI SW (RCAM3 & FCAM)

DISPLAY PMIC

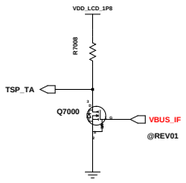

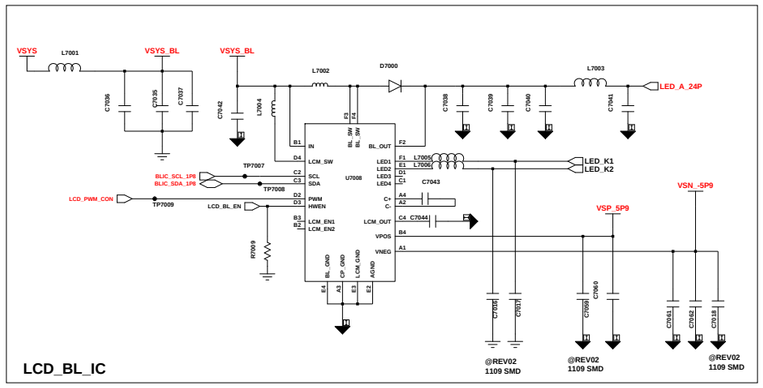

CAM PMIC

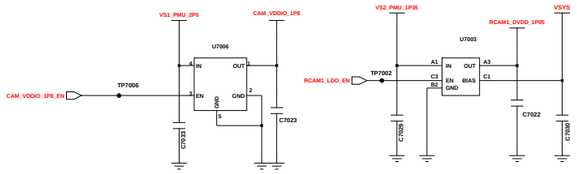

300mA - PSG guide - new item

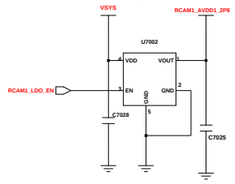

300mA - PSG guide

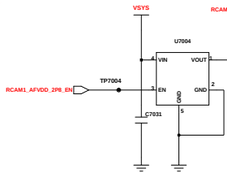

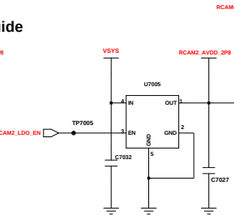

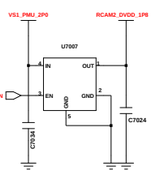

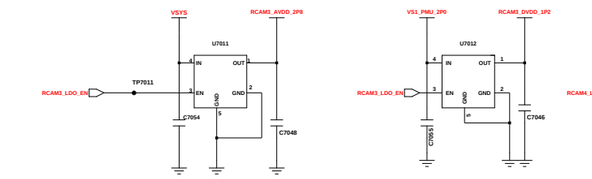

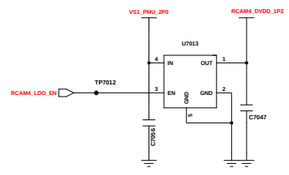

300mA - PSG guide - new item

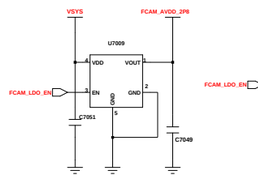

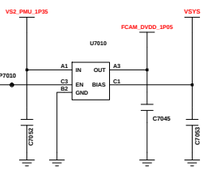

Engineer:	CAMERA, DISPLAY
Drawn by:	
R&D CHK:	TITLE: Size:
DOC CTRL CHK:	
MFG ENGR CHK:	
Changed by: / Date Changed: / Time Changed: / QA CHK:	REV: / Drawing Number: / Page: 2/7

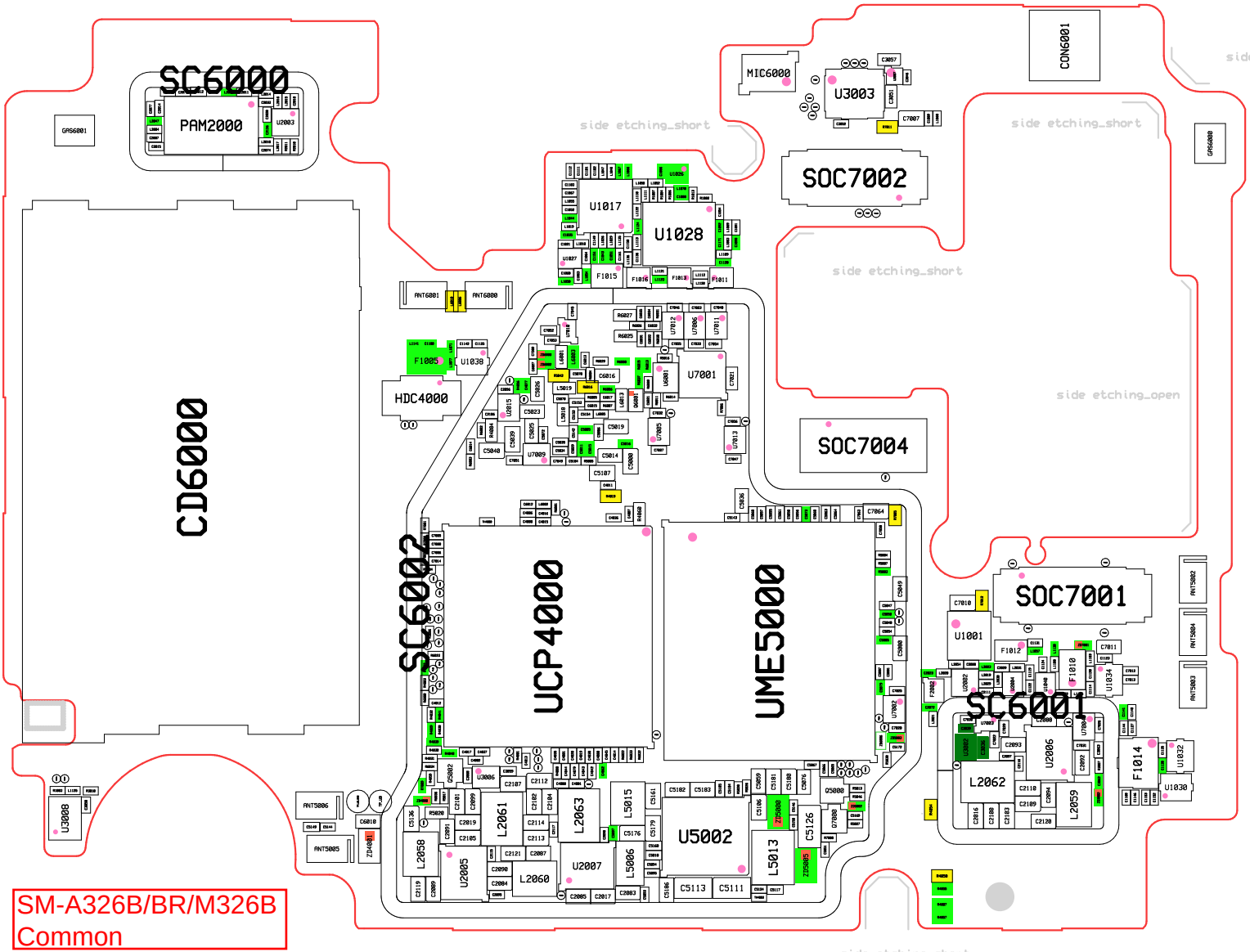

SM-A326B/BR/M326B
Common

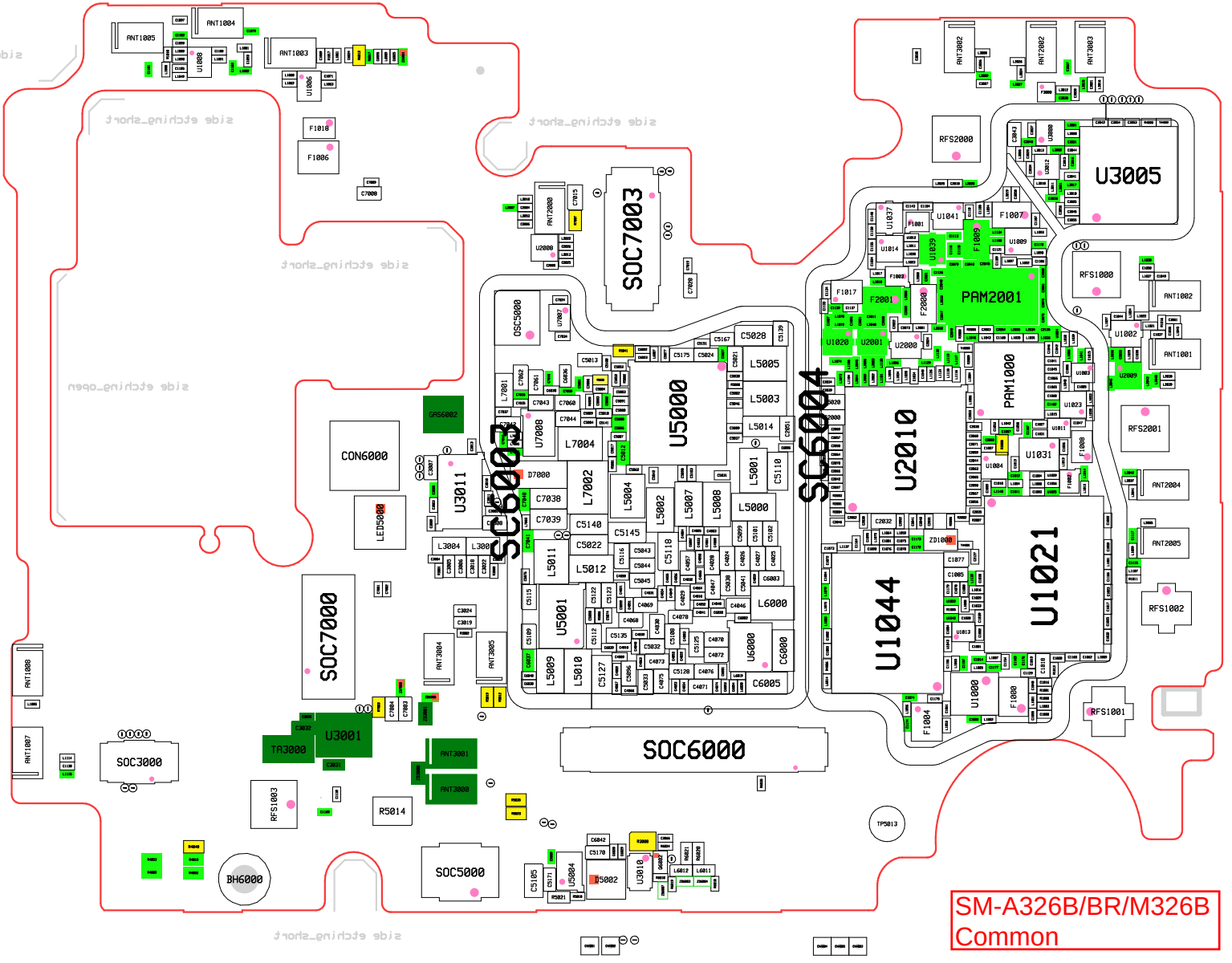
ANT1005
ANT1004
ANT1003
U1006
U1005
F1010
F1006
C7000
side etching_short
side etching_open
ANT2000
U2000
C7015
SOC7003
C7020
OSC5000
U7007
C5013
C5167
C5028
C5139
C5175
C5024
C5021
L5005
L5003
L5014
C5051
U5000
L7001
C7062
C7061
C5036
C7043
C7060
C7044
C7042
C7041
U7008
L7004
D7000
C7038
C7039
C5140
C5145
C5022
L7002
L5004
L5002
L5007
L5008
L5000
L5001
C5110
C5012
C5116
C5043
C5044
C5045
C5118
C5115
C5122
C5123
C5189
C4069
C4068
C4067
C4066
C4065
C4064
C4063
C4062
C4061
C5099
C5101
C5102
C5041
C4025
C6003
L6000
C4046
C4070
C4072
C4071
C5128
C4076
C5125
C5135
C5032
C4073
C4075
C5033
C5056
C4068
C4069